DIMNS MARKED DENOTES (S) SAFETY/REGULATION (F) CRITICAL FIT/FUNCTION (M) MAJOR FIT/FUNCTION (M2) MINOR FIT/FUNCTION

FINISH GRINDING Ø	PLATING THICKNESS (BEFORE POST CHROME GRINDING)	PLATING THICKNESS (AFTER POST CHROME GRINDING)	Ø'C'	MODEL
Ø10.943~10.953	16 ±3μm	10–15μm	Ø10.960~10.986	K67G & KTEP

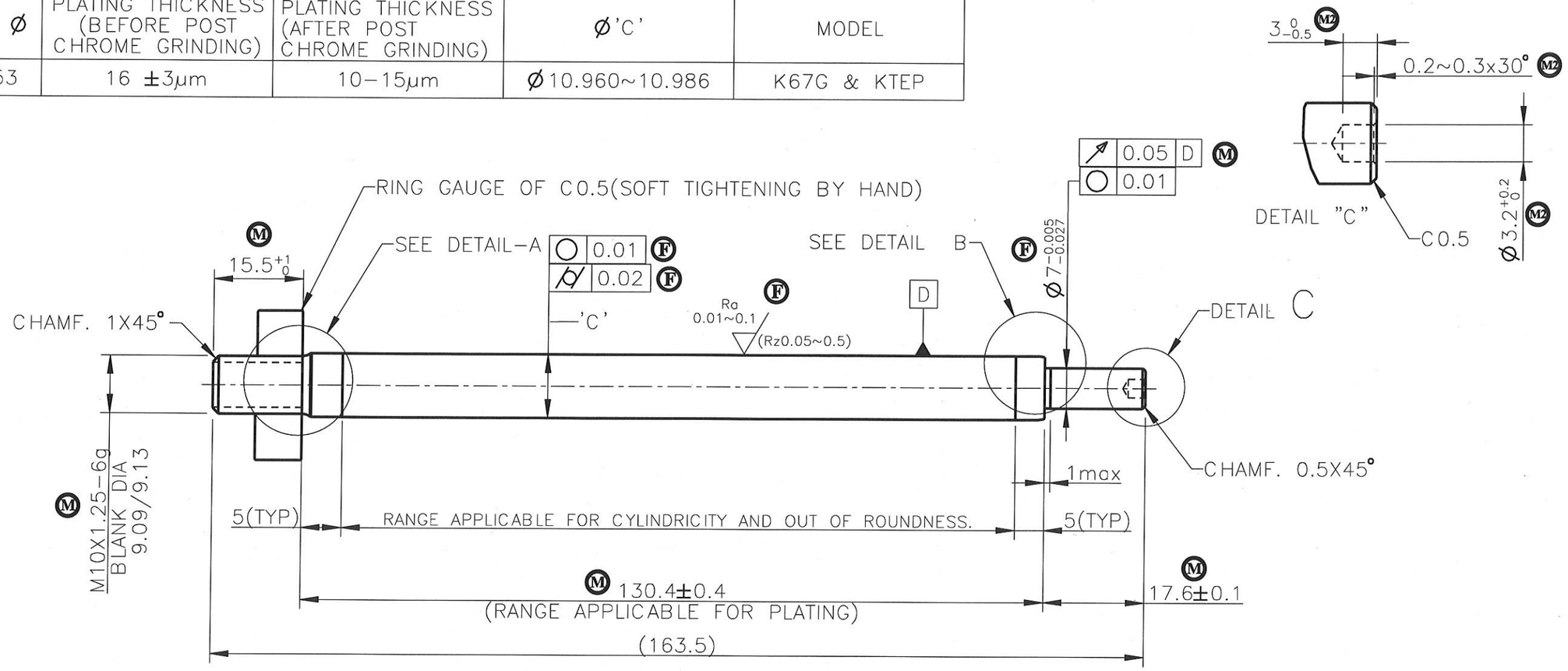

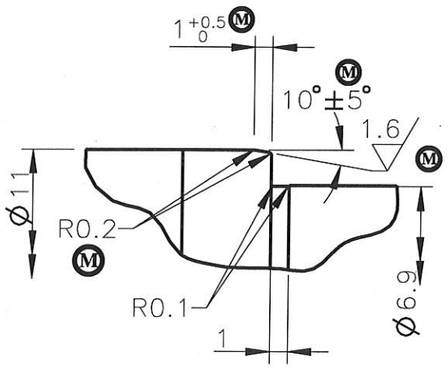

(PROFILE AT FINISH GRINDING)
DETAIL "B"

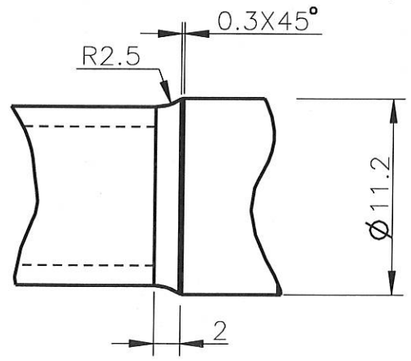

(PROFILE AT MACHINING STAGE)
DETAIL "A"

NOTE:

1. TO BE GROUND TO FINISH SIZE AFTER PLATING. MATERIAL REMOVAL 3~5μ ON DIAMETER.
2. (M) PLATING QUALITY SHALL BE AS PER HES D2011–99
3. (M) CHROME HARDNESS : HV 800MIN. / 50gms LOAD.
4. (M) CORROSION RESISTANCE AND OTHER QUALITY CHECK AS PER HES D2011–99.
5. MUST BE NO CHATTER, SCRATCH,ABRASION AND BRUSIE ON SURFACE OF Ø11
6. MUST BE NO PIN HOLE, ROUGH SURFACE AND BLISTER AFTER PLATING.
7. DIMENSIONS WITHIN () ARE ONLY FOR REFERENCE & NOT FOR INSPECTION.

DATE	REV	ALTERATION	E.C.N.NO
29.01.18	03	RELEASED FOR MASS PRODUCTION	207–03
04.04.17	1D	OTS RELEASE	D41/'17

SUPERSEDES :--
GENERAL TOLERANCE ASPER : –
DESIGN SOURCE REF.
RELEASE FOR ☐ COSTING ☐ PROTOTYPE ☐ OTS ☐ PRE–PRODUCTION ■ PRODUCTION

GABRIEL INDIA LTD.

SCALE	SHEETS	FINISH:	MASS:
1:1	1 / 1	HARD CHROME PLATING (MFiCr1)	111 g

DRAWN BY RAJAN K. DATE: 29.01.18
CHECKED BY BALAJI D DATE: 29.01.18
APPROVED BY DIVAKAR BHAT DATE: 29.01.18

NAME:– PISTON ROD
MATERIAL:– (S) BAR–3404010–AS.PER–GP136–5
PART NO:– 34040605 REV. 03

ALL DIMENSIONS ARE IN MM. | NO MANUAL ALTERATION | DO NOT SCALE | IF IN DOUBT PLEASE ASK | SIZE : A0

FILE ARCHIVE LOCATION: Dev projects\Honda\KWP\KWPJ\Drawings & Model\

CONFIDENTIAL: THIS DRAWING AND THE INFORMATION THEREIN ARE THE PROPERTY OF GABRIEL INDIA LTD., AND SHALL NOT BE REPRODUCED, COPIED RECORDED IN ANY MEDIA, USED FOR ANY OTHER PURPOSE OR DELIVERED AND/OR DISCLOSED TO ANY THIRD PARTY WITHOUT WRITTEN CONSENT OF GABRIEL.